DH-IPC-HFW1239TC1-A-PRO

2MP WizColor Lite Fixed-focal Bullet Entry Network Camera

Super AI Coding

Series Overview

With features of simple installation, easy operation, and high performance-cost ratio, Dahua Entry series network camera is applicable to small and medium-sized scenes, such as homes/ residences, small-sized retail stores, and other small and medium-sized enterprises.

Functions

WizColor Technology

Dahua WizColor Technology seamlessly combines with the powerful AI-ISP, large pixel size sensor and large aperture in cameras. This unique integration enables cameras to effortlessly capture high-quality images with vibrant colors during nighttime scenarios, ensuring fine details are preserved and minimizing motion blur. Unlike traditional self-illuminating cameras, Dahua WizColor Technology maximizes the utilization of weak light sources, such as moonlight and city lights reflected in the sky, delivering captivating full-color images of the entire scene. It also ensures that monitoring distances are not compromised at night due to limited illumination ranges, facilitating full-color image capture even over long distances.

AI-ISP

With AI ISP technology, the camera is able to easily adapt to scenes, producing high quality images that reveal the fine details of targets.

SMD Plus

With intelligent algorithm, Dahua Smart Motion Detection technology can categorize the targets that trigger motion detection and filter the motion detection alarm triggered by non-concerned targets to realize effective and accurate alarm.

- 2-MP 1/2.9" CMOS image sensor, low luminance, and high definition image.
- Outputs max 2 MP (1920 × 1080)@25/30 fps.
- H.265 codec, high compression rate, ultra-low bit rate.
- Built-in warm light, the max warm light distance is 30 m.
- DWDR, 3D NR, HLC, BLC, digital watermarking, applicable to various monitoring scenes.
- ROI, Super AI Coding (H.265/H.264), flexible coding, applicable to various bandwidth and storage environments.
- Abnormality detection: Motion detection, video tampering, audio detection, network disconnection, IP conflict, and illegal access.
- Built-in Mic.
- 12 VDC/PoE power supply.
- IP67 protection.
- Supports human and vehicle detection.

Super AI Coding

With advanced AI object detection and scene recognition technology, Super AI Coding integrates ROI, BAE, and DFE to achieve higher encoding efficiency than H.265 and H.264 while effectively reducing storage and transmission costs without compromising video quality.

Protection (IP67, Wide Voltage)

IP67: The camera passes a series of strict test on dust and soak. It has dust-proof function, and the enclosure can work normally after soaking in 1 m deep water for 30 minutes.

Wide voltage: The camera allows ±30% (for some power supplies) input voltage tolerance (wide voltage range), and it is widely applied to outdoor environment with instable voltage.

Technical Specification

Camera

Image Sensor	1/2.9" CMOS
Max. Resolution	1920 (H) × 1080 (V)
Scanning System	Progressive
Electronic Shutter Speed	Auto/Manual 1/3 s–1/100,000 s
Min. Illumination	0.0004 lux@F1.0
S/N Ratio	>56 dB
Illumination Distance	2.8 mm: Up to 20 m (65.62 ft) (Warm light) 3.6 mm: Up to 30 m (98.43 ft) (Warm light)
Illuminator On/Off Control	Auto;Manual
Illuminator Number	1 (Warm light)
Angle Adjustment	Pan: 0° to 360° Tilt: 0° to 90° Rotation: 0° to 360°

Lens

Lens Type	Fixed-focal
Lens Mount	M12
Focal Length	2.8 mm; 3.6 mm
Max. Aperture	F1.0
Field of View	2.8 mm: H: 101°; V: 53°; D: 119° 3.6 mm: H: 81°; V: 44°; D: 95°
Iris Control	Fixed
Close Focus Distance	2.8 mm: 1.1 m (3.61 ft) 3.6 mm: 1.7 m (5.58 ft)

	Lens	Detect	Observe	Recognize	Identify
DORI Distance	2.8 mm	47.1 m (154.53 ft)	18.9 m (62.01 ft)	9.4 m (30.84 ft)	4.7 m (15.42 ft)
	3.6 mm	55.7 m (182.74 ft)	22.3 m (73.16 ft)	11.1 m (36.42 ft)	5.6 m (18.37 ft)
	*DORI (Detect, Observe, Recognize, Identify) is a standard system (EN-62676-4) for defining the ability of a person viewing the video to distinguish persons or objects within a covered area. The numbers in this table do not reflect intelligent function distances. For intelligent function distances, refer to installation and commissioning manual/project design tool.				

Intelligence

SMD	SMD Plus
Smart Search	Works together with Smart NVR to perform refine intelligent search, event extraction and merging to event videos.

Video

Video Compression	H.265; H.264; H.264H; H.264B; MJPEG (Only supported by sub stream)
AI Coding	Super AI Coding (H.265); Super AI Coding (H.264) *Includes smart codec technology, Smart H.265+ and Smart H.264+
Video Frame Rate	Main stream: 1920 × 1080@(1–25/30 fps)
Video Frame Rate	Sub stream: 704 × 576@(1–25 fps)/704 × 480@(1–30 fps) *The values above are the max frame rates of each stream; for multiple streams, the values will be subjected to the total encoding capacity.
Streaming Capability	2 streams
Resolution	1080p (1920 × 1080); 1.3M (1280 × 960); 720p (1280 × 720); D1 (704 × 576/704 × 480); VGA (640 × 480); CIF (352 × 288/352 × 240)
Bit Rate Control	VBR;CBR
Video Bit Rate	H.264: 24 kbps–4096 kbps; H.265: 9 kbps–4096 kbps
Day/Night	Color/B/W
BLC	Yes
HLC	Yes
WDR	DWDR
White Balance	Auto; Natural; Street Lamp; Outdoor; Manual; Regional Custom
Gain Control	Manual;Auto
Noise Reduction	3D NR
Motion Detection	OFF/ON (4 areas, rectangular)
Region of Interest (RoI)	Yes (4 areas)
Smart Illumination	Yes
Image Rotation	0°/90°/180°/270° (Supports 90°/270° with 1080p resolution and lower)
Mirror	Yes
Privacy Masking	4 areas

Audio

Built-in MIC	Yes, built-in Mic
Audio Compression	G.711a; G.711Mu; PCM; G.726

Alarm

Alarm Event	Network disconnection; IP conflict; illegal access; motion detection; video tampering; audio detection; SMD; security exception

Network

Network Port	RJ-45 (10/100 Base-T)
SDK and API	Yes
Network Protocol	IPv4; IPv6; HTTP; TCP; UDP; ARP; RTP; RTSP; RTCP; RTMP; SMTP; FTP; DHCP; DNS; DDNS; NTP; Multicast; ICMP; IGMP; NFS; P2P; Auto Registration
Interoperability	ONVIF (Profile S & Profile T); CGI
User/Host	6 (Total bandwidth: 24 M)
Storage	FTP
Browser	IE Chrome Firefox
Management Software	Smart PSS Lite; DSS; DMSS; DoLynk Care

Mobile Client	iOS;Android
Security	Digest;WSSE;Account lockout;Security logs;IP/MAC filtering;Generation and importing of X.509 certification;syslog;HTTPS;Trusted boot;Trusted execution;Trusted upgrade;Session security;Security warning;SSL/TLS1.2;AES 256
Certification	
Certifications	CE-LVD: EN62368-1; CE-EMC: Electromagnetic Compatibility Directive 2014/30/EU
Power	
Power Supply	12 VDC (±30%); PoE (802.3af)
Dual Power Backup	Yes
Power Consumption	Basic: 1.3 W (12 VDC); 2.1 W (PoE); Max.: 3.6 W (12 VDC); 4.8 W (PoE) (ICR switch + AI ISP on + illuminator intensity)
Environment	
Operating Temperature	–40 °C to +60 °C (–40 °F to +140 °F)
Operating Humidity	≤95% (RH), non-condensing
Storage Temperature	–40 °C to +60 °C (–40 °F to +140 °F)
Storage Humidity	≤95% (RH), non-condensing
Protection	IP67
Anti-corrosion Level	Basic Protection *The products are designed for general use and are applicable even in areas with no specific requirements for anti-corrosion protection.
Structure	
Casing Material	Metal + Plastic
Product Dimensions	180.4 mm × 70 mm × 70 mm (7.10" × 2.76" × 2.76") (L × W × H)
Net Weight	0.29 kg (0.64 lb)
Gross Weight	0.40 kg (0.88 lb)

Ordering Information

Type	Model	Description
IP CAMERA	DH-IPC-HFW1239TC1-A-PRO	2MP WizColor Lite Fixed-focal Bullet Entry Network Camera
Accessories (Optional)	DH-PFA130-E	Water-proof Junction Box
	G3416GW	G3/4" Water Joint
	DH-PFA151	Corner Mount Bracket
	DH-PFA152-E	Pole Mount Bracket
	DH-PFA134	Junction Box
	DH-PFM320-010EN	DC12V 1A Power Adapter
	DH-PFM325D-1210EN	DC12V 1A Power Adapter
	DH-PFM325D-1215EN	DC12V 1.5A Power Adapter
	DH-PFM320-020EN	DC12V 2A Power Adapter
	DH-PFM320D-EN	DC12V 2A Power Adapter
	PFM900-E	Integrated Mount Tester

Accessories

Optional:

DH-PFA130-E
Water-proof Junction Box

G3416GW
G3/4" Water Joint

DH-PFA151
Corner Mount Bracket

DH-PFA152-E
Pole Mount Bracket

DH-PFA134
Junction Box

DH-PFM320-010EN
DC12V 1A Power Adapter

DH-PFM325D-1210EN
DC12V 1A Power Adapter

DH-PFM325D-1215EN
DC12V 1.5A Power Adapter

DH-PFM320-020EN
DC12V 2A Power Adapter

DH-PFM320D-EN
DC12V 2A Power Adapter

PFM900-E
Integrated Mount Tester

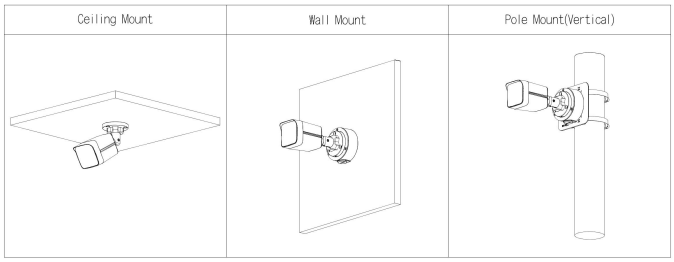

Dimensions (mm[inch])

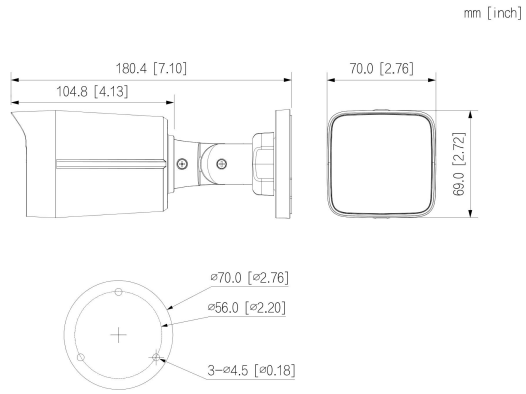

©2026 Dahua. All rights reserved. Design and specifications are subject to change without notice.
Pictures in the document are for reference only, and the actual product shall prevail.